

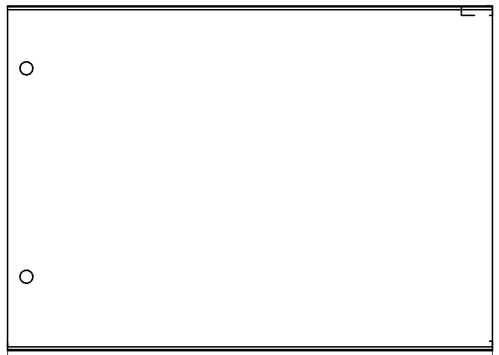

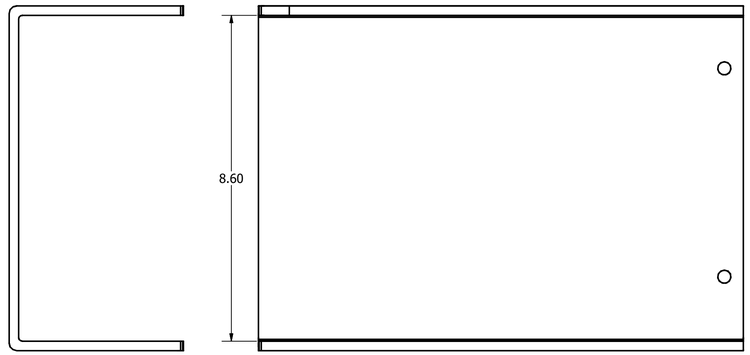

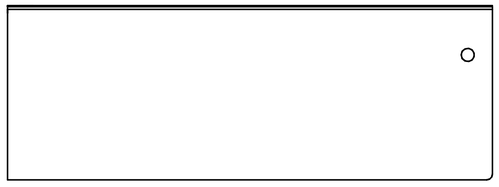

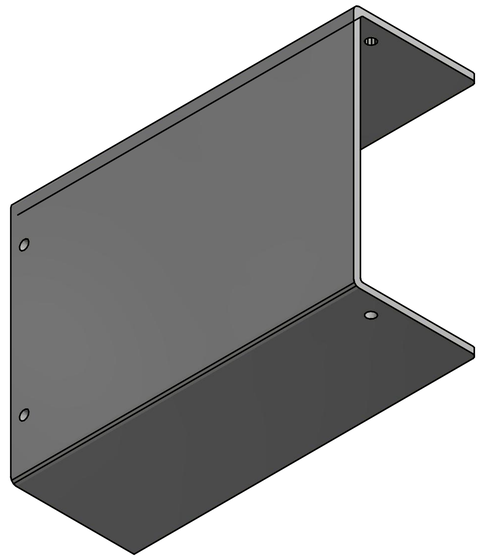

PARTS LIST			
ITEM	QTY	PART NUMBER	DESCRIPTION
1	1	HO100002271 Housing	1mm non-flammable transparent plastic material

DRAWN zechnerf	30.09.2019		
CHECKED		TITLE	
QA			
MFG			
APPROVED		SIZE D	DWG NO HO100002271 Housing
		SCALE 1 / 2	SHEET 1 OF 1